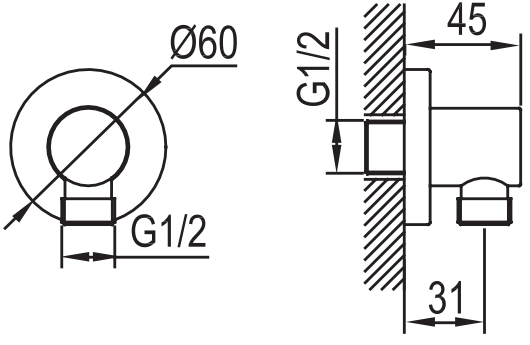
Ø60
G1/2
G1/2
45
31